$t_L/t_B \sim 361.8$, but we can observe from Fig. 3(b) that if we attempted to approach such a value of gain, the rise time would become prohibitively large.

Appendix B

A. Logic Control of the Input Drive Waveform

There is fertile ground for innovation in the development of digital logic circuits to produce near idealized waveforms for the profiled drive signals. It is a particularly attractive proposition to have, even in simplest form, an output sensing system which actually monitors the load conditions rather than a circuit that relies purely on predetermined drive. Such a scheme could take the form as shown in Fig. 4. Here, the initial turn-on pulse is terminated as soon as the collector voltage has gone low (the delay unit to the upper AND gate being equipped with a desired threshold adjustment). Then the transistors are maintained in the on state by the sample-and-hold without the usual over-saturation of the bipolar transistor. The clock-off pulse eventually cancels the sample-and-hold, transmits the turn-off signal, and the latter is cancelled when the collector has gone high (off-state), by the lower AND gate with its inverted input. Alternatively, this AND gate with its output inverter (making NAND) could be reduced, by DeMorgan's theorem, to an OR gate with complemented inputs.

References

[1] M. J. Lazarus, "Profiled current drive for pulsed bipolar transistor switching," *Electron. Lett.*, vol. 29, no. 11, p. 943, (May 1993).

[2] M. J. Lazarus and K. V. O. Rabah, "Operation of fluorescent lamps from batteries using pulsed power transistors and auto-transformers," *IEEE Electron Device Lett.*, vol. 13, no. 2, pp. 120–122, Feb. 1992.

[3] A. Rothermel and B. Hosticka, "Speed comparison of digital BICMOS and CMOS circuits," *IEE Proc.*, 136 Pt. G., pp. 49–56, Apr. 1989.

[4] Siliconix FET Data Book, SD210 n-channel DMOS FETs.

On A Lyapunov Approach to Stability Analysis of 2-D Digital Filters

W.-S. Lu

***Abstract*—This paper describes an approach to the stability analysis of two-dimensional (2-D) digital filters that are modeled in the Fornasini-Marchesini state space using a class of generalized 2-D Lyapunov equations. The generalization was made based on the constant 2-D Lyapunov equation proposed recently by Hinamoto. It is shown that the use of the generalized Lyapunov equations narrows the gap between "sufficiency" and "necessity" for a state-space digital filter to be stable, which occurs in Hinamoto's Lyapunov theorem. Feasible methods for finding numerical solutions of the generalized 2-D Lyapunov equation are also proposed. An example is included to illustrate the main results of the paper.**

I. Introduction

Various Lyapunov equations have been used as effective tool for stability analysis of both one-dimensional (1-D) and two-dimensional (2-D) systems, see e.g. [1]–[8] and the references cited there. Unlike its 1-D counterpart, however, the stability theorems based on the constant 2-D Lyapunov equation investigated in [4], [7] for the Roesser model and the constant 2-D Lyapunov equation proposed and studied in [8] for the Fornasini-Marchesini model provide only *sufficient* conditions for stability of the state-space digital filters considered. In particularly, as can be seen from [8] and the analysis presented in Section II, there are many 2-D filters that are stable but do not satisfy the Lyapunov equation proposed in [8]. The chief objective of this paper is to propose a generalized constant 2-D Lyapunov equation and to apply it in the stability analysis of the 2-D digital filters in the Fornasini-Marchesini local state-space setting. Again the stability theorem obtained here gives a sufficient condition but it includes Hinamoto's stability theorem [8] as a special case and narrows the gap between "sufficiency" and "necessity" for a state-space digital filter to be stable, which occurs in Hinamoto's Lyapunov theorem. Issues related to numerical solutions of the proposed 2-D Lyapunov equation are addressed in some detail in a separate section, and the paper is concluded with an example illustrating the main results obtained.

Manuscript received August 2, 1993. This work was supported by the Natural Science and Engineering Research Council of Canada. This paper was recommended by Associate Editor Hari Reddy.

The author is with the Department of Electrical and Computer Engineering, University of Victoria, Victoria, BC, Canada V8W 3P6.

IEEE Log Number 9405172.

II. Preliminaries

The 2-D digital filters considered in this paper are those modeled in Fornasini and Marchesini's local state space by

$$x(i+1,j+1) = \mathbf{A}_1 x(i,j+1) + \mathbf{A}_2 x(i+1,j) + \mathbf{b}_1 u(i,j+1) + \mathbf{b}_2 u(i+1,j) \tag{1a}$$

$$y(i,j) = \mathbf{c}x(i,j) + du(i,j) \tag{1b}$$

where $\mathbf{A}_1, \mathbf{A}_2 \in R^{n\times n}$. It is known [9] that (1) is asymptotically stable if and only if

$$p(z_1,z_2) \equiv \det(\mathbf{I} - z_1\mathbf{A}_1 - z_2\mathbf{A}_2) \neq 0 \text{ for } (z_1,z_2) \in \bar{U} \tag{2}$$

where $\bar{U} = \{(z_1,z_2): \ |z_1| \le 1, \ |z_2| \le 1\}$, and $\mathbf{I}$ denotes the identity matrix of dimension n. In [8] Hinamoto proved the following theorem:

Theorem 1 [8]: (1) is asymptotically stable if there exists a positive definite symmetric $\mathbf{P} \in R^{n\times n}$ such that

$$\mathbf{Q} = \begin{bmatrix} \alpha\mathbf{P} & \mathbf{0} \\ \mathbf{0} & \beta\mathbf{P} \end{bmatrix} - \mathbf{A}^T\mathbf{P}\mathbf{A} \tag{3}$$

is positive definite where $\mathbf{A} = [\mathbf{A}_1 \quad \mathbf{A}_2]$, and

$$\alpha, \beta > 0, \quad \alpha + \beta = 1 \tag{4}$$

A graphic illustration of Theorem 1 was also given in [8] as follows. If filter (1) satisfies (3) and (4), then all zeros of characteristic polynomial $p(z_1,z_2)$ correspond to locations outside the ellipse in the first quadrant shown in Fig. 1, where the ellipse is described by

$$\frac{|z_1|^2}{1/\alpha} + \frac{|z_2|^2}{1/\beta} = 1 \tag{5}$$

From this illustration it follows that stable filters with poles (i.e., zeros of $p(z_1,z_2)$) corresponding to the locations in *both* shadowed areas S_1 and S_2 shown in Fig. 2, for example, do not satisfy (3) and (4). This is to say, no α and β can be found to meet (4) such that zeros of $p(z_1,z_2)$ in both areas S_1 and S_2 are left outside the corresponding ellipse. Thus we see that there is a large number of filters that are stable but their stability cannot be confirmed using Theorem 1. We shall touch upon this matter again in Sec. V using an example.

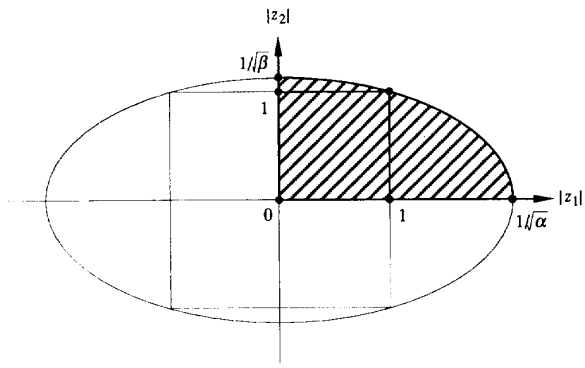

Fig. 1. A graphic illustration of the conditions in Theorem 1 [8].

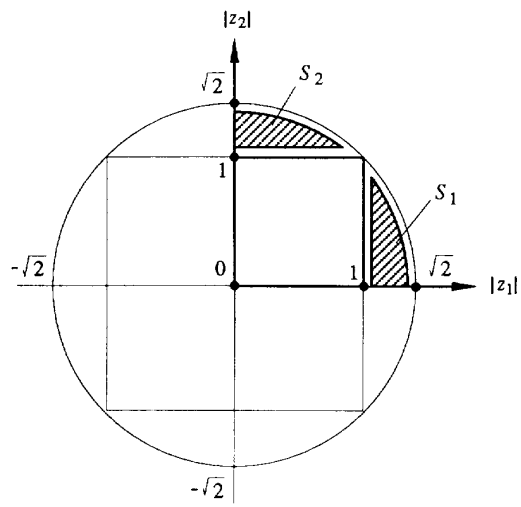

Fig. 2. A graphic illustration of the sufficiency of Theorem 1.

In the rest of paper we use $\mathbf{H} > \mathbf{0}$ and $\mathbf{H} \geq \mathbf{0}$ to mean that matrix $\mathbf{H}$ is positive definite and $\mathbf{H}$ is positive semi-definite, respectively. For a positive definite (or semi-definite) real matrix $\mathbf{P}$, one can always write

$$\mathbf{P} = \mathbf{U}^T \mathbf{\Sigma} \mathbf{U}$$

where $\mathbf{U}$ is orthogonal and $\mathbf{\Sigma} = \operatorname{diag}\{\sigma_1, \ldots, \sigma_n\}$ with $\sigma_k > 0$ (or ≥ 0) for $k = 1, \ldots, n$. If we denote $\mathbf{\Sigma}^{1/2} = \operatorname{diag}\{\sigma_1^{1/2}, \ldots, \sigma_n^{1/2}\}$, then

$$\mathbf{P} = \mathbf{P}^{T/2}\mathbf{P}^{1/2} \tag{6}$$

where

$$\mathbf{P}^{1/2} = \mathbf{\Sigma}^{1/2}\mathbf{U}$$

and $\mathbf{P}^{T/2} = (\mathbf{P}^{1/2})^T$. Such a $\mathbf{P}^{1/2}$ is usually referred to as the (nonsymmetric) square root of $\mathbf{P}$. Using (6) the Lyapunov equation (3) can be written as

$$\mathbf{Q} = \begin{bmatrix} \mathbf{P}^{T/2}(\alpha\mathbf{I})\mathbf{P}^{1/2} & \mathbf{0} \\ \mathbf{0} & \mathbf{P}^{T/2}(\beta\mathbf{I})\mathbf{P}^{1/2} \end{bmatrix} - \mathbf{A}^T\mathbf{P}^{T/2}\mathbf{I}\mathbf{P}^{1/2}\mathbf{A} \tag{7}$$

In the rest of paper we shall consider the Lyapunov equation

$$\mathbf{Q} = \begin{bmatrix} \mathbf{P}^{T/2}\mathbf{W}_1\mathbf{P}^{1/2} & \mathbf{0} \\ \mathbf{0} & \mathbf{P}^{T/2}\mathbf{W}_2\mathbf{P}^{1/2} \end{bmatrix} - \mathbf{A}^T\mathbf{P}^{T/2}\mathbf{R}\mathbf{P}^{1/2}\mathbf{A} \tag{8}$$

where matrices $\mathbf{P}$, $\mathbf{W}_1$, $\mathbf{W}_2$ and $\mathbf{R}$ are all positive definite. Clearly (8) becomes (3) if $\mathbf{W}_1 = \alpha\mathbf{I}$, $\mathbf{W}_2 = \beta\mathbf{I}$ and $\mathbf{R} = \mathbf{I}$. For this reason we shall call (8) the *generalized* 2-D Lyapunov equation associated with state-space model (1).

III. Main Results

The main theorem, stated and proved below, describes the use of the generalized Lyapunov equation (8) to confirm stability of a 2-D state-space digital filter.

Theorem 2: (1) is asymptotically stable if there are positive definite matrices $\mathbf{P}$, $\mathbf{W}_1$, $\mathbf{W}_2$, and $\mathbf{R}$, such that matrix $\mathbf{Q}$ given by (8) is positive difinite and that

$$\mathbf{R} - \mathbf{W}_1 - \mathbf{W}_2 \geq 0 \tag{9}$$

Proof: We prove the theorem by contradiction. Suppose the conditions of the theorem are satisfied but (1) is unstable. Then there is $(z_1, z_2) \in \bar{U}$ such that

$$\det(\mathbf{I} - z_1\mathbf{A}_1 - z_2\mathbf{A}_2) = 0 \tag{10}$$

Hence there exists $\mathbf{v} \neq 0$ such that

$$\mathbf{v} = \mathbf{A}\begin{bmatrix} z_1\mathbf{I} \\ z_2\mathbf{I} \end{bmatrix}\mathbf{v} \tag{11}$$

where $\mathbf{A} = [\mathbf{A}_1 \quad \mathbf{A}_2]$. We now use (8) and (11) to compute the equation shown at the bottom of the page, where $\mathbf{v}^*$ denotes the complex conjugate transposition of $\mathbf{v}$, $\bar{z}_i$ is the complex conjugate of z_i, and $\mathbf{v}_z^* = \mathbf{v}^*[\bar{z}_1\mathbf{I} \quad \bar{z}_2\mathbf{I}]$. It follows that

$$\mathbf{v}^*\mathbf{P}^{T/2}(\mathbf{R} - |z_1|^2\mathbf{W}_1 - |z_2|^2\mathbf{W}_2)\mathbf{P}^{1/2}\mathbf{v} = -\mathbf{v}_z^*\mathbf{Q}\mathbf{v}_z \tag{12}$$

By (10) we note that $(z_1, z_2) \neq (0, 0)$, hence $\mathbf{v}_z \neq 0$. So $\mathbf{Q} > \mathbf{0}$ means that the right-hand side of (12) is negative. On the other hand, $|z_1| \leq 1$, $|z_2| \leq 1$ and the positive semi-definiteness of $\mathbf{R} - \mathbf{W}_1 - \mathbf{W}_2$ imply that $\mathbf{R} - |z_1|^2\mathbf{W}_1 - |z_2|^2\mathbf{W}_2 \geq \mathbf{0}$, therefore the left-hand side of (12) is nonnegative, leading to a contradiction. This completes the proof. □

Several consequences can be drawn from Theorem 2 immediately.

Corollary 2.1: (1) is asymptotically stable if there is a matrix $\mathbf{P} > 0$ such that

$$\mathbf{Q} = \begin{bmatrix} \mathbf{P}^{T/2}\mathbf{W}_1\mathbf{P}^{1/2} & \mathbf{0} \\ \mathbf{0} & \mathbf{P}^{T/2}\mathbf{W}_2\mathbf{P}^{1/2} \end{bmatrix} - \mathbf{A}^T\mathbf{P}\mathbf{A} \tag{13}$$

is positive definite, where $\mathbf{W}_1 = \mathbf{U}^T\mathbf{\Sigma}_1\mathbf{U}$, $\mathbf{W}_2 = \mathbf{U}^T\mathbf{\Sigma}_2\mathbf{U}$ with $\mathbf{U}$ orthogonal, $\mathbf{\Sigma}_1 = \operatorname{diag}\{\sigma_{11}, \ldots, \sigma_{1n}\}$, $\mathbf{\Sigma}_2 = \operatorname{diag}\{\sigma_{21}, \ldots, \sigma_{2n}\}$,

$$\sigma_{1k} > 0, \ \sigma_{2k} > 0 \ \text{ and } \ \sigma_{1k} + \sigma_{2k} = 1, \quad 1 \leq k \leq n \tag{14}$$

Proof: Let $\mathbf{R} = \mathbf{I}$ and note $\mathbf{I} - \mathbf{W}_1 - \mathbf{W}_2 = \mathbf{0}$. Applying Theorem 2 completes the proof. □

If the orthogonal matrix $\mathbf{U}$ in above corollary is set to be the identity matrix then we obtain the following corollary.

Corollary 2.2: (1) is asymptotically stable if there is a matrix $\mathbf{P} > 0$ such that

$$\mathbf{Q} = \begin{bmatrix} \mathbf{P}^{T/2}\mathbf{W}_1\mathbf{P}^{1/2} & \mathbf{0} \\ \mathbf{0} & \mathbf{P}^{T/2}\mathbf{W}_2\mathbf{P}^{1/2} \end{bmatrix} - \mathbf{A}^T\mathbf{P}\mathbf{A} \tag{15}$$

$$\mathbf{v}^*\mathbf{P}^{T/2}\mathbf{R}\mathbf{P}^{1/2}\mathbf{v} = \mathbf{v}^*[\bar{z}_1\mathbf{I} \quad \bar{z}_2\mathbf{I}]\begin{bmatrix} \mathbf{P}^{T/2}\mathbf{W}_1\mathbf{P}^{1/2} & \mathbf{0} \\ \mathbf{0} & \mathbf{P}^{T/2}\mathbf{W}_2\mathbf{P}^{1/2} \end{bmatrix}\begin{bmatrix} z_1\mathbf{I} \\ z_2\mathbf{I} \end{bmatrix}\mathbf{v} - \mathbf{v}_z^*\mathbf{Q}\mathbf{v}_z$$

is positive definite, where $\mathbf{W}_i = \operatorname{diag}\{\sigma_{i1}, \ldots, \sigma_{in}\}$ $(i = 1, 2)$ satisfy (14).

Corollary 2.3 (Hinamoto): (1) is asymptotically stable if there is a matrix $\mathbf{P} > 0$ such that

$$\mathbf{Q} = \begin{bmatrix} \alpha\mathbf{P} & \mathbf{0} \\ \mathbf{0} & \beta\mathbf{P} \end{bmatrix} - \mathbf{A}^T\mathbf{P}\mathbf{A} \tag{16}$$

is positive definite, where

$$\alpha > 0,\ \beta > 0 \ \text{ and } \ \alpha + \beta = 1 \tag{17}$$

Proof: This is another special case of Theorem 2 with $\mathbf{R} = \mathbf{I}$, $\mathbf{W}_1 = \alpha\mathbf{I}$ and $\mathbf{W}_2 = \beta\mathbf{I}$. By (17) we have $\mathbf{R} - \mathbf{W}_1 - \mathbf{W}_2 = \mathbf{0}$, and the use of Theorem 2 completes the proof. □

Note that in all three corollaries matrix $\mathbf{R}$ is assigned to be the identity matrix. As will be seen from the next theorem, this assignment does not lose the generality of Theorem 2.

Theorem 3: The sufficient conditions stated in Theorem 2 for (1) to be asymptotically stable and the conditions stated below are equivalent: There exist matrices $\mathbf{P} > \mathbf{0}$, $\mathbf{W}_1 > 0$, and $\mathbf{W}_2 > 0$ such that

$$\mathbf{Q} = \begin{bmatrix} \mathbf{P}^{T/2}\mathbf{W}_1\mathbf{P}^{1/2} & \mathbf{0} \\ \mathbf{0} & \mathbf{P}^{T/2}\mathbf{W}_2\mathbf{P}^{1/2} \end{bmatrix} - \mathbf{A}^T\mathbf{P}\mathbf{A} \tag{18}$$

is positive definite and

$$\mathbf{I} - \mathbf{W}_1 - \mathbf{W}_2 \geq \mathbf{0} \tag{19}$$

Proof: Since the stability of a state-space digital filter remains unchanged under a state-variable transformation $x(i,j) = T\tilde{x}(i,j)$, one can instead consider the stability of an equivalent filter realization $(\tilde{\mathbf{A}}_1, \tilde{\mathbf{A}}_2, \tilde{\mathbf{b}}_1, \tilde{\mathbf{b}}_2, \tilde{\mathbf{c}}, \tilde{\mathbf{d}})$ with $\tilde{\mathbf{A}}_1 = \mathbf{T}^{-1}\mathbf{A}_1\mathbf{T}$, $\tilde{\mathbf{A}}_2 = \mathbf{T}^{-1}\mathbf{A}_2\mathbf{T}$. The generalized 2-D Lyapunov equation for state-space representation $(\tilde{\mathbf{A}}, \tilde{\mathbf{b}}, \tilde{\mathbf{c}}, \tilde{\mathbf{d}})$ is

$$\tilde{\mathbf{Q}} = \begin{bmatrix} \tilde{\mathbf{P}}^{T/2}\tilde{\mathbf{W}}_1\tilde{\mathbf{P}}^{1/2} & \mathbf{0} \\ \mathbf{0} & \tilde{\mathbf{P}}^{T/2}\tilde{\mathbf{W}}_2\tilde{\mathbf{P}}^{1/2} \end{bmatrix} - \tilde{\mathbf{A}}^T\tilde{\mathbf{P}}^{T/2}\tilde{\mathbf{R}}\tilde{\mathbf{P}}^{1/2}\tilde{\mathbf{A}} \tag{20}$$

and condition (9) becomes

$$\tilde{\mathbf{R}} - \tilde{\mathbf{W}}_1 - \tilde{\mathbf{W}}_2 \geq 0 \tag{21}$$

Now let $\mathbf{T} = \mathbf{P}^{-1/2}\tilde{\mathbf{R}}^{1/2}\mathbf{P}^{1/2}$ for some $\mathbf{P} > 0$ and note that

$$\tilde{\mathbf{A}} = [\tilde{\mathbf{A}}_1 \quad \tilde{\mathbf{A}}_2] = \mathbf{T}^{-1}\mathbf{A}\begin{bmatrix} \mathbf{T} & \mathbf{0} \\ \mathbf{0} & \mathbf{T} \end{bmatrix}$$

(20) becomes (18) with

$$\mathbf{Q} = \begin{bmatrix} \mathbf{T}^{-1} & \mathbf{0} \\ \mathbf{0} & \mathbf{T}^{-1} \end{bmatrix}^T \tilde{\mathbf{Q}} \begin{bmatrix} \mathbf{T}^{-1} & \mathbf{0} \\ \mathbf{0} & \mathbf{T}^{-1} \end{bmatrix} \tag{22}$$

and

$$\mathbf{W}_1 = \tilde{\mathbf{R}}^{-T/2}\tilde{\mathbf{W}}_1\tilde{\mathbf{R}}^{-1/2}, \quad \mathbf{W}_2 = \tilde{\mathbf{R}}^{-T/2}\tilde{\mathbf{W}}_2\tilde{\mathbf{R}}^{-1/2} \tag{23}$$

From (22) and (23) it follows that $\mathbf{Q} > \mathbf{0}$ if and only if $\tilde{\mathbf{Q}} > \mathbf{0}$, and that (21) is satisfied if (19) holds. □

IV. Numerical Solution to Generalized Lyapunov Equation

In this section we consider the problem of numerically solving Lyapunov equation (18) in the following sense: Given $\mathbf{A} = [\mathbf{A}_1 \ \mathbf{A}_2]$, find $\mathbf{P} > 0$, $\mathbf{W}_1 > 0$, and $\mathbf{W}_2 > 0$ such that $\mathbf{Q}$ defined by (18) is positive definite and (19) holds. In what follows, we first present a result that relates the existence of such positive definite $\mathbf{P}$, $\mathbf{W}_1$, $\mathbf{W}_2$ to a norm minimization problem. Discussions then follow to consider numerical solution of this norm minimization problem for two special cases where both matrices $\mathbf{W}_1$, $\mathbf{W}_2$ are diagonal.

Theorem 4: There exist $\mathbf{P} > 0$, $\mathbf{W}_1 > 0$ and $\mathbf{W}_2 > 0$ such that (19) holds and $\mathbf{Q}$ defined in (18) is positive definite if and only if

$$\underset{\substack{\mathbf{T},\mathbf{V}_1,\mathbf{V}_2 \text{ nonsingular} \\ \mathbf{I}-\mathbf{V}_1^{-T}\mathbf{V}_1^{-1}-\mathbf{V}_2^{-T}\mathbf{V}_2^{-1}\geq 0}}{\text{minimize}} \left\| \tilde{\mathbf{A}} \begin{bmatrix} \mathbf{V}_1 & \mathbf{0} \\ \mathbf{0} & \mathbf{V}_2 \end{bmatrix} \right\| < 1 \tag{24}$$

where $\tilde{\mathbf{A}} = [\tilde{\mathbf{A}}_1 \ \ \tilde{\mathbf{A}}_2]$, $\tilde{\mathbf{A}}_1 = \mathbf{T}^{-1}\mathbf{A}_1\mathbf{T}$, $\tilde{\mathbf{A}}_2 = \mathbf{T}^{-1}\backslash\mathbf{A}_2\mathbf{T}$, and $\|\cdot\|$ denotes the induced 2-norm of the matrix involved.

Proof: Assume there exist $\mathbf{P} > \mathbf{0}$, $\mathbf{W}_1 > 0$ and $\mathbf{W}_2 > \mathbf{0}$ such that $\mathbf{Q}$ in (18) is positive definite and (19) holds. We write

$$\mathbf{W}_1 = \mathbf{V}_1^{-T}\mathbf{V}_1^{-1} \ \text{ and } \ \mathbf{W}_2 = \mathbf{V}_2^{-T}\mathbf{V}_2^{-1}$$

and set $\mathbf{T}^{-1} = \mathbf{P}^{1/2}$ in order to write (18) and (19) as shown in (25) and

$$\mathbf{I} - \mathbf{V}_1^{-T}\mathbf{V}_1^{-1} - \mathbf{V}_2^{-T}\mathbf{V}_2^{-1} \geq \mathbf{0} \tag{26}$$

respectively. As $\mathbf{Q} > \mathbf{0}$, (25) implies that

$$\left\| \tilde{\mathbf{A}} \begin{bmatrix} \mathbf{V}_1 & \mathbf{0} \\ \mathbf{0} & \mathbf{V}_2 \end{bmatrix} \right\| < 1 \tag{27}$$

and hence (24) holds. Conversely, if (24) holds then there are some nonsingular $\mathbf{T}$, $\mathbf{V}_1$, $\mathbf{V}_2$ satisfying (27). This means

$$\mathbf{I} - \mathbf{V}_1^{-T}\mathbf{V}_1^{-1} - \mathbf{V}_2^{-T}\mathbf{V}_2^{-1} \geq \mathbf{0} \tag{28}$$

and

$$\tilde{\mathbf{Q}} \equiv \mathbf{I}_{2n} - \begin{bmatrix} \mathbf{V}_1^T & \mathbf{0} \\ \mathbf{0} & \mathbf{V}_2^T \end{bmatrix} \tilde{\mathbf{A}}^T\tilde{\mathbf{A}} \begin{bmatrix} \mathbf{V}_1 & \mathbf{0} \\ \mathbf{0} & \mathbf{V}_2 \end{bmatrix} > 0 \tag{29}$$

If we let $\mathbf{P} = \mathbf{T}^{-T}\mathbf{T}^{-1}$, $\mathbf{W}_1 = \mathbf{V}_1^{-T}\mathbf{V}_1^{-1}$, $\mathbf{W}_2 = \mathbf{V}_2^{-T}\mathbf{V}_2^{-1}$, then (29) implies that $\mathbf{Q}$ defined in (18) is positive definite where

$$\mathbf{Q} = \begin{bmatrix} \mathbf{T}^{-T}\mathbf{V}_1^{-T} & \mathbf{0} \\ \mathbf{0} & \mathbf{T}^{-T}\mathbf{V}_2^{-T} \end{bmatrix} \tilde{\mathbf{Q}} \begin{bmatrix} \mathbf{V}_1^{-1}\mathbf{T}^{-1} & \mathbf{0} \\ \mathbf{0} & \mathbf{V}_2^{-1}\mathbf{T}^{-1} \end{bmatrix}$$

and (28) gives (19). □

There is a variety of efficient methods that can be used to solve the optimization problem (24) [10], [11]. In what follows we discuss two special cases where $\mathbf{V}_1$ and $\mathbf{V}_2$ assume diagonal forms, leading to much simplified unconstrained minimization problems. *Case A:* In this case $\mathbf{V}_1$ and $\mathbf{V}_2$ assume the form of

$$\mathbf{V}_1 = \begin{bmatrix} 1/v_{11} & & \mathbf{0} \\ & \ddots & \\ \mathbf{0} & & 1/v_{1n} \end{bmatrix}, \quad \mathbf{V}_2 = \begin{bmatrix} 1/v_{21} & & \mathbf{0} \\ & \ddots & \\ \mathbf{0} & & 1/v_{2n} \end{bmatrix} \tag{30}$$

with $v_{1i} > 0$ and $v_{2i} > 0$ $(1 \leq i \leq n)$. To meet constraint (28), it is required that

$$v_{1i}^2 + v_{2i}^2 = 1, \quad 1 \leq i \leq n \tag{31}$$

$$\begin{bmatrix} \mathbf{V}_1^T\mathbf{T}^T & \mathbf{0} \\ \mathbf{0} & \mathbf{V}_2^T\mathbf{T}^T \end{bmatrix} \mathbf{Q} \begin{bmatrix} \mathbf{T}_1\mathbf{V}_1 & \mathbf{0} \\ \mathbf{0} & \mathbf{T}\mathbf{V}_2 \end{bmatrix} = \mathbf{I}_{2n} - \begin{bmatrix} \mathbf{V}_1^T & \mathbf{0} \\ \mathbf{0} & \mathbf{V}_2^T \end{bmatrix} \tilde{\mathbf{A}}^T\tilde{\mathbf{A}} \begin{bmatrix} \mathbf{V}_1 & \mathbf{0} \\ \mathbf{0} & \mathbf{V}_2 \end{bmatrix} \tag{25}$$

which implies that

$$0 < v_{1i} < 1 \tag{32}$$

$$v_{2i} = (1 - v_{1i})^{1/2} \tag{33}$$

The hyperbolic tangent transformation

$$v_{1i} = \frac{1 + \tanh \nu_i}{2}, \; 1 \le i \le n \tag{34}$$

can be used to meet constraint (32) where $\nu_i \in (-\infty, \infty)$. With (30), (33) and (34), the minimization problem is simplified as

$$\underset{\substack{\mathbf{T} \text{ nonsingular} \\ -\infty < \nu_1, \ldots, \nu_n < \infty}}{\text{minimize}} \left\| \tilde{\mathbf{A}} \begin{bmatrix} \mathbf{V}_1 & \mathbf{0} \\ \mathbf{0} & \mathbf{V}_2 \end{bmatrix} \right\| \tag{35}$$

where

$$\mathbf{V}_1 = \begin{bmatrix} \frac{2}{1 + \tanh \nu_1} & & \mathbf{0} \\ & \ddots & \\ \mathbf{0} & & \frac{2}{1 + \tanh \nu_n} \end{bmatrix}$$

$$\mathbf{V}_2 = \begin{bmatrix} \frac{2}{[4 - (1 + \tanh \nu_1)^2]^{1/2}} & & \mathbf{0} \\ & \ddots & \\ \mathbf{0} & & \frac{2}{[4 - (1 + \tanh \nu_n)^2]^{1/2}} \end{bmatrix} \tag{36}$$

Although the state-variable transformation matrix $\mathbf{T}$ in problem (35) needs to be nonsingular, (35) can be considered as an *unconstrained* optimization problem due to the following two reasons: First, the measure of the set of points in the parameter space that make $\mathbf{T}$ singular is zero from a classic measure-theoretic point of view [12] meaning that the chance to meet a point in the parameter space that corresponds to a singular matrix $\mathbf{T}$ in a search process during minimization is extremely rare; second, during the minimization, updating a parameter vector to a new one that would be closer to a singular $\mathbf{T}$ is always discouraged as a nearly singular $\mathbf{T}$ tends to increase the value of the norm in (35) due to the presence of $\mathbf{T}^{-1}$ in $\tilde{\mathbf{A}}$. In other words, in this norm minimization problem the use of a good optimization algorithm would very unlikely lead to a solution that corresponds to a nearly singular $\mathbf{T}$. *Case B:* In this case $\mathbf{V}_1$ and $\mathbf{V}_2$ assume the form of

$$\mathbf{V}_1 = \frac{1}{v_1}\mathbf{I} \text{ and } \mathbf{V}_2 = \frac{1}{v_2}\mathbf{I} \tag{37}$$

with $v_i > 0$ $(i = 1, 2)$. To satisfy (28), it is required that

$$v_1^2 + v_2^2 = 1$$

Hence

$$0 < v_1 < 1 \text{ and } v_2 = (1 - v_1^2)^{1/2}$$

Similar to Case A, an hyperbolic tangent transformation

$$v_1 = \frac{1 + \tanh \nu}{2}, \; -\infty < \nu < \infty \tag{38}$$

and

$$v_2 = \frac{1}{2}[4 - (1 + \tanh \nu)^2]^{1/2}, \; -\infty < \nu < \infty \tag{39}$$

can be used in (37) with $-\infty < \nu < \infty$ so that the minimization problem

$$\underset{\substack{\mathbf{T} \text{nonsingular} \\ -\infty < \nu < \infty}}{\text{minimize}} \left\| \tilde{\mathbf{A}} \begin{bmatrix} \mathbf{V}_1 & \mathbf{0} \\ \mathbf{0} & \mathbf{V}_2 \end{bmatrix} \right\| \tag{40}$$

with $\mathbf{V}_i$ $(i = 1, 2)$ specified by (37)–(39) is essentially unconstrained. Finally, it is easy to see that as $\mathbf{W}_1 = \mathbf{V}_1^{-T}\mathbf{V}_1^{-1} = v_1^2\mathbf{I}$ and $\mathbf{W}_2 = \mathbf{V}_2^{-T}\mathbf{V}_2^{-1} = v_2^2\mathbf{I}$, (40) with (37)–(39) provides a feasible approach to numerically solving Hinamoto's Lyapunov equation (3).

V. An Example

In this section we use a second-order state-space digital filter modeled by (1) with

$$\mathbf{A}_1 = \begin{bmatrix} 0.8 & 1 \\ 0 & 0.1 \end{bmatrix}, \; \mathbf{A}_2 = \begin{bmatrix} 0.1 & 1 \\ 0 & 0.8 \end{bmatrix}$$

to illustrate the results obtained in the preceding sections. Note first that

$$\det(\mathbf{I} - z_1\mathbf{A}_1 - z_2\mathbf{A}_2) = (1 - 0.8z_1 - 0.1z_2)(1 - 0.1z_1 - 0.8z_2)$$

For $(z_1, z_2) \in \bar{U}$,

$$|1 - 0.8z_1 - 0.1z_2| > 1 - 0.8|z_1| - 0.1|z_2| > 1 - 0.8 - 0.1 > 0$$

$$|1 - 0.8z_1 - 0.1z_2| > 1 - 0.1|z_1| - 0.8|z_2| > 1 - 0.1 - 0.8 > 0$$

thus $\det(\mathbf{I} - z_1\mathbf{A}_1 - z_2\mathbf{A}_2) \neq 0$ for $(z_1, z_2) \in \bar{U}$ and, therefore, the filter is asymptotically stable [9].

Further notice that

$$\det(\mathbf{I} - z_1\mathbf{A}_1 - z_2\mathbf{A}_2) = 0 \text{ at } P_1 : (z_1, z_2) = (1.25, 0)$$

and

$$P_2 : (z_1, z_2) = (0, 1.25)$$

Since points P_1 and P_2 correspond to locations in areas S_1 and S_2 (see Fig. 2), respectively, we know from Sec. II that no α, β, and $\mathbf{P} > 0$ can be found to make $\mathbf{Q}$ defined in (3) positive definite with α, β satisfying (4). As a matter of fact, with initial $\mathbf{T} = \mathbf{I}$ and $\nu = 0.4$, solving minimization problem (40) in this case gives

$$\underset{\substack{\mathbf{T} \text{ nonsingular} \\ -\infty < \nu < \infty}}{\text{minimize}} \left\| \tilde{\mathbf{A}} \begin{bmatrix} \mathbf{V}_1 & \mathbf{0} \\ \mathbf{0} & \mathbf{V}_2 \end{bmatrix} \right\| \approx 1.14065$$

where the minimum is achieved by

$$\mathbf{T} = \begin{bmatrix} 1.68421 & -0.17883 \\ 0.00224 & 0.01781 \end{bmatrix} \text{ and } \nu = 0.44077$$

Although the objective function in (40) has many local minimum points, a large number of trials with randomly chosen initial points indicates that the global minimum value of the objective function is no less than 1.14, which obviously agrees with the conclusion made before.

We now consider the generalized Lyapunov equation (15) with constraint (14). This amounts to solving the minimization problem (35), (36). With initial $\mathbf{T} = \mathbf{I}$ and $\nu_1 = \nu_2 = 0.4$, we obtain

$$\underset{\substack{\mathbf{T} \text{ nonsingular} \\ -\infty < \nu < \infty}}{\text{minimize}} \left\| \tilde{\mathbf{A}} \begin{bmatrix} \mathbf{V}_1 & \mathbf{0} \\ \mathbf{0} & \mathbf{V}_2 \end{bmatrix} \right\| = 0.90057 < 1$$

where the local minimum is achieved by

$$\mathbf{T} = \begin{bmatrix} 1.78522 & -0.02254 \\ 0 & 0.00098 \end{bmatrix}, \; \nu_1 = 1.42871, \; \nu_2 = -0.38240$$

It follows from Theorem 4 that

$$\mathbf{P} = \mathbf{T}^{-T}\mathbf{T}^{-1} = \begin{bmatrix} 0.313811 & 9.540086 \\ 9.540086 & 1.040436 \times 10^6 \end{bmatrix} > \mathbf{0}$$

$$\mathbf{W}_1 = \mathbf{V}_1^{-T}\mathbf{V}_1^{-1} = \begin{bmatrix} 0.894351 & 0 \\ 0 & 0.100872 \end{bmatrix} > \mathbf{0}$$

$$\mathbf{W}_2 = \mathbf{V}_2^{-T}\mathbf{V}_2 = \begin{bmatrix} 0.105649 & 0 \\ 0 & 0.899128 \end{bmatrix} > \mathbf{0}$$

satisfy constraint (14). It is found that $\mathbf{Q}$ defined in (15) is given by

$$\mathbf{Q} = \begin{bmatrix} 0.079814 & 5.671777 \\ 5.671777 & 9.467606 \times 10^4 \end{bmatrix}$$

which is positive definite. Therefore Corollary 2.2 confirms the stability of the filter.

VI. Conclusions

We have in this paper made a generalization of the constant 2-D Lyapunov equation proposed recently by Hinamoto [8] and showed its usefulness in stability analysis of 2-D digital filters in a local state-space setting.

References

[1] T. Kailath, *Linear Systems.* Englewood Cliffs, NJ: Prentice Hall, 1980.
[2] M. Vidyasagar, *Nonlinear Systems Analysis (2nd ed).* Englewood Cliffs, NJ: Prentice Hall, 1993.
[3] W.-S. Lu and A. Antoniou, *Two-Dimensional Digital Filters.* New York: Marcel Dekker, 1992.
[4] N. G. El-Agizi and M. M. Fahmy, "Two-dimensional digital filters with no overflow oscillations," *IEEE Trans. Acoust., Speech, Signal Processing*, vol. 27, pp. 454–469, June 1979.
[5] E. Fornasini and G. Marchesini, "Stability analysis of 2-D systems," *IEEE Trans. Circuits Syst.*, vol. 27, pp. 1210–1217, Dec. 1980.
[6] W.-S. Lu and E. B. Lee, "Stability analysis for two-dimensional systems via a Lyapunov approach," *IEEE Trans. Circuits Syst.*, vol. 32, pp. 61–68, Jan. 1985.
[7] B. D. O. Anderson, P. Agathoklis, E. I. Jury, and M. Mansour, "Stability and the matrix Lyapunov equations for discrete two-dimensional systems," *IEEE Trans. Circuits Syst.*, vol. 33, pp. 261–267, Mar. 1986.
[8] T. Hinamoto, "2-D Lyapunov equation and filter design based on Fornasini-Marchesini second model," *IEEE Trans. Circuits Syst. I.* vol. 40, pp. 102–110, Feb. 1993.
[9] E. Fornasini and G. Marchesini, "Doubly indexed dynamical systems: State-space models and structural properties," *Math. Syst. Theory*, vol. 12, pp. 59–72, 1978.
[10] D. G. Luenberger, *Linear and Nonlinear Programming (2nd ed).* Reading, MA: Addison-Wesley, 1984.
[11] R. Fletcher, *Practical Methods of Optimization.* Chichester: John Wiley, 1987.
[12] A. C. Zaanen, *Linear Analysis.* Amsterdam: North-Holland Publishing Co., 1960.

Interaction of Low- and High-Frequency Oscillations in a Nonlinear RLC Circuit

Ali Oksasoglu and Dimitry Vavriv

***Abstract*—The interaction of low- and high-frequency oscillations in an RLC circuit with a nonlinear capacitance is studied from the point of the modern theory of dynamical systems. It is found that for a certain range of parameters such an interaction may cause chaotic instability, even under the weakly nonlinear excitation conditions. The scenarios and conditions that give rise to chaotic oscillations are investigated both numerically and analytically.**

I. Introduction

Today, the nonlinear reactances, such as varactor diodes, have a wide range of use in many areas of electrical engineering. The nonlinear capacitances are incorporated into a circuit so as to design parametric amplifiers, up-converters, mixers, low-power microwave oscillators, electronic tuning devices, etc. A simple RLC circuit with

Manuscript received October 7, 1993; revised April 20, 1994. This paper was recommended by Associate Editor Michael Peter Kennedy.

A. Oksasoglu is with the Department of Electrical and Electronics Engineering, Cukurova University, Balcal, Adana, Turkey.

D. Vavriv is with the Institute of Radio Astronomy, Kharkov, Ukraine.

IEEE 9405175.

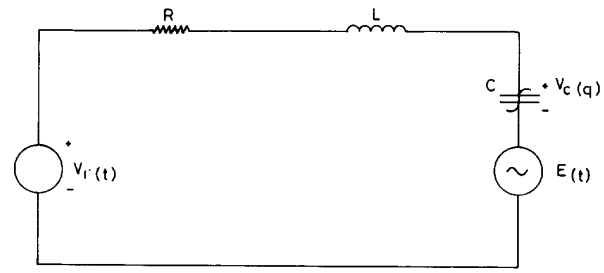

Fig. 1. A nonlinear RLC circuit.

a nonlinear reactance, as shown in Fig. 1, can be considered to be a typical building block for some of the above-mentioned devices. The circuit contains two sources; the input source, $v_i(t) = V_m \sin(\omega t)$, is the high-frequency signal, and $E(t) = E_m \sin(\Omega t)$ is the low-frequency voltage source used to modulate the nonlinear capacitor. By the low- and high-frequency distinction, we mean $\omega \gg \Omega$. So far, such circuits have been studied mainly by using the method of harmonic balance or some other similar methods. However, in the frame of such methods, it is not possible to give an exact account of the stability performance of the system. Recent results obtained in the theory of dynamical systems [1] indicate that the dynamics of even such simple circuits should be revised from the point of chaotic instability. In this paper, we investigate the interaction of low and high frequencies in the circuit, and show that such an interaction can initiate chaotic instability.

II. Formulation

For the $v - q$ characteristic of the nonlinear capacitance, let us use the approximation $v_c = q/C_0 + a_2 q^2 + a_3 q^3$ where C_0 is the value of the "linear" capacitance, and a_2, and a_3 are the nonlinearity coefficients depending on the type of the varactor diode used. In this case, the differential equation governing the circuit's behavior is reduced to the equation of motion of the Duffing type oscillator:

$$\frac{d^2q}{dt^2} + \omega_0^2 q = -\frac{a_2}{L}q^2 - \frac{a_3}{L}q^3 - \frac{R}{L}\frac{dq}{dt} + \frac{V_m}{L}\sin(\omega t) + \frac{E_m \sin(\Omega t)}{L} \tag{1}$$

where $\omega_0^2 = 1/LC_0$ is the natural frequency of the oscillator. We consider the resonant excitation when $|\omega - \omega_0| \cong \omega_0/Q$, where $Q = \omega_0 L/R$ is the quality factor of the circuit.

So far, the chaotic behavior of such oscillators has been repeatedly demonstrated for the case of its strong nonlinearity under large external perturbations, i.e., large V_m (see e.g. [1], [2]). However, such situations are not typical for most practical realizations. In practice, V_m is usually small in the sense that such systems can be considered weakly-nonlinear, and according to the previous results obtained in this area, the chaotic instability is not typical for such systems.

Let us consider the interaction of the low and high frequency oscillations under weak nonlinearity conditions. By using the transformation $q = q_0 x + E/Lw_0^2$, where q_0 is the unit charge, and x is a dimensionless variable, (1) can be reduced to the quasi-linear form,

$$\frac{d^2x}{d\bar{t}^2} + x = -2\delta\left[\frac{dx}{d\bar{t}} + b_2(x+E_2)^2 + b_3(x+E_2)^3 - V_0\sin(\nu\bar{t})\right] \tag{2}$$